12972.00.00

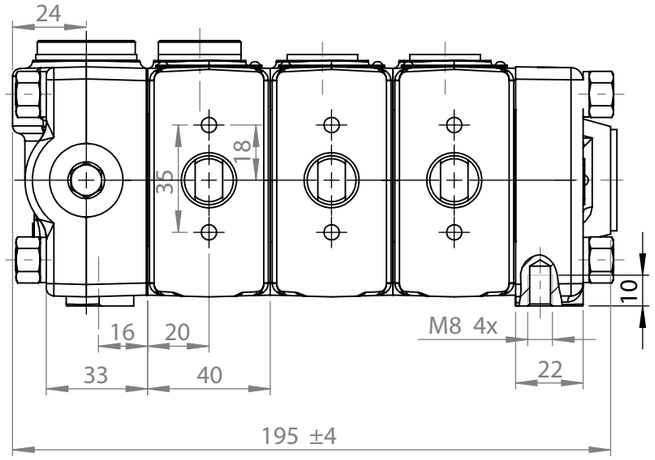

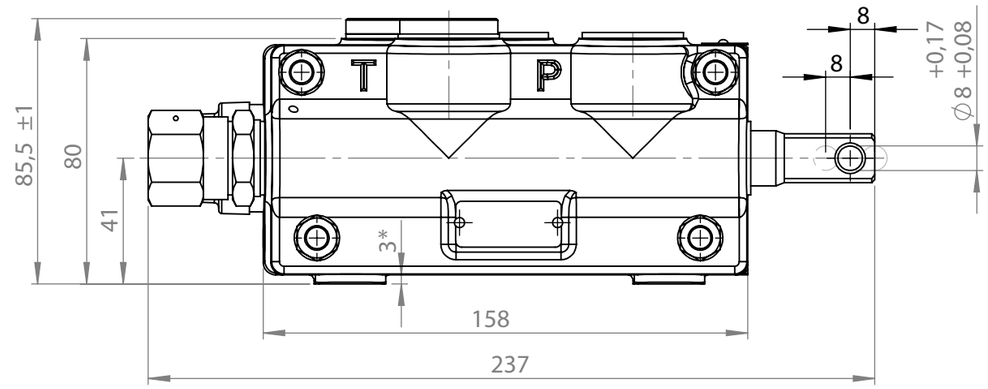

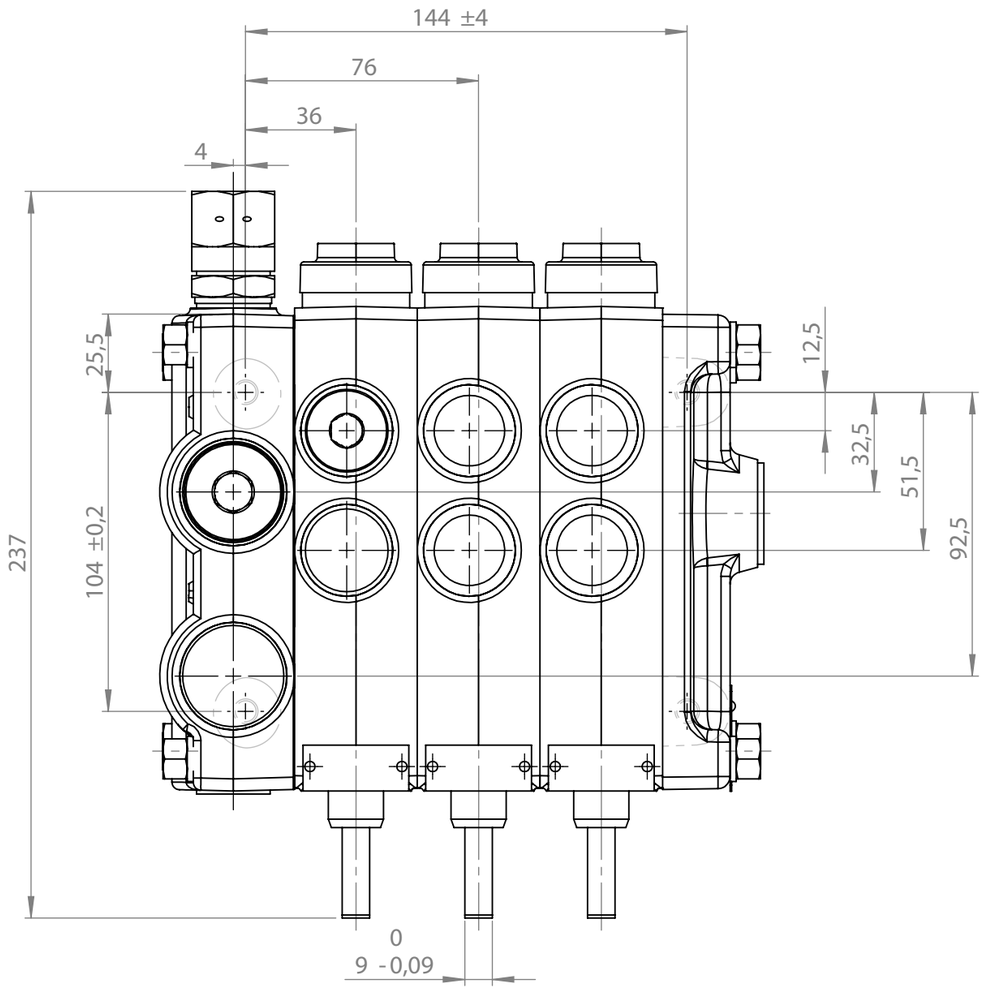

1.Technical parameters
1.1.Nominal flow- 60 dm³/min
1.2.Nominal pressure- 20 MPa
1.3.Pressure range from 7 to 20 MPa

2.1.Way of ordering
-Type
-Inlet section
-Section
-Outlet
2.2. In one valve all sections should be with one and the same hydraulic scheme of distribution- parallel or series
*2.3. All dimensions marked with * are for check up.*

			14.10.2008	sheet 1/2		material		
				scale 1:2				
						description		weight kg
						РХ 346 4БнСС3		11.713
						№		
						12972.00.00		

12972.00.00

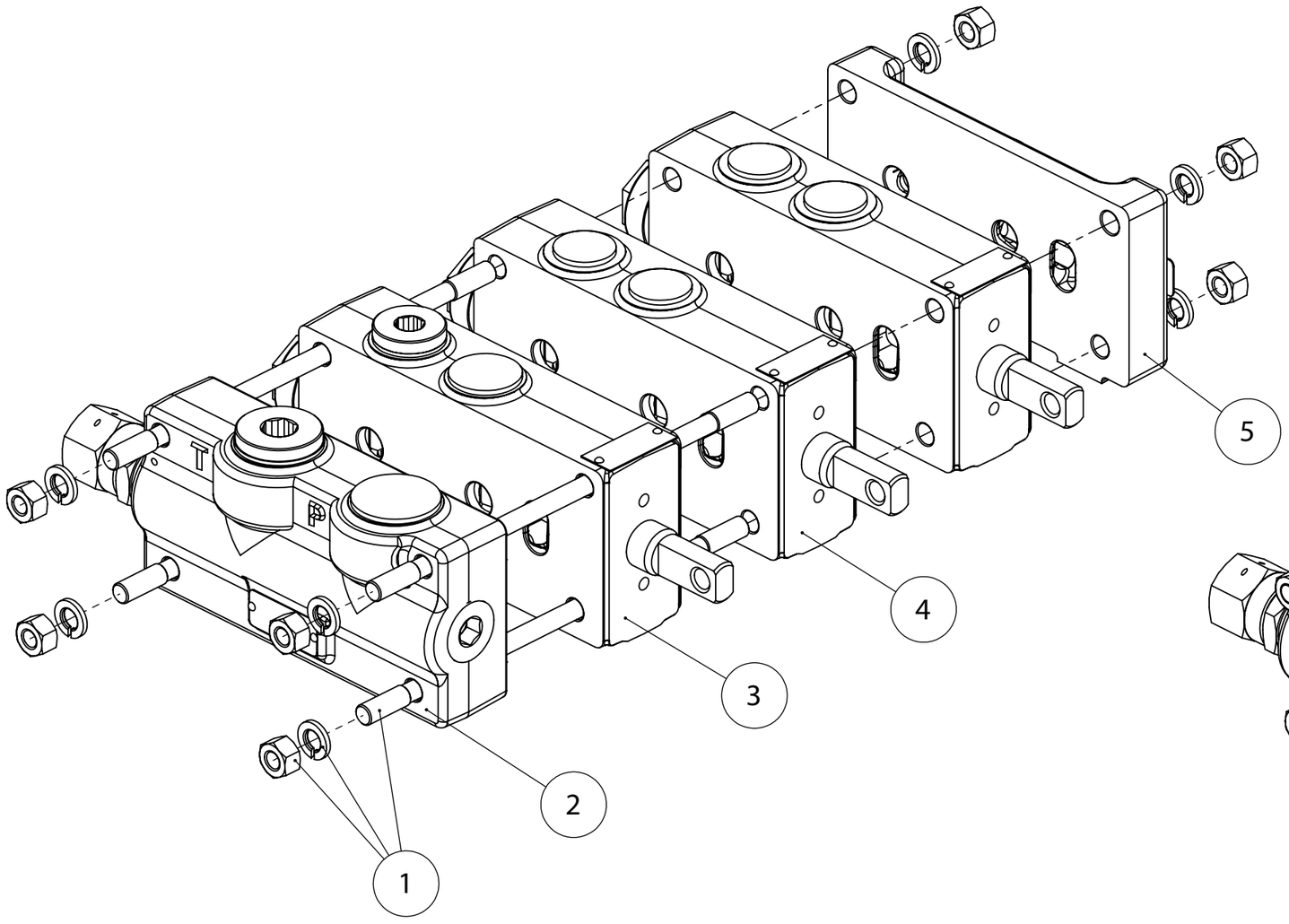

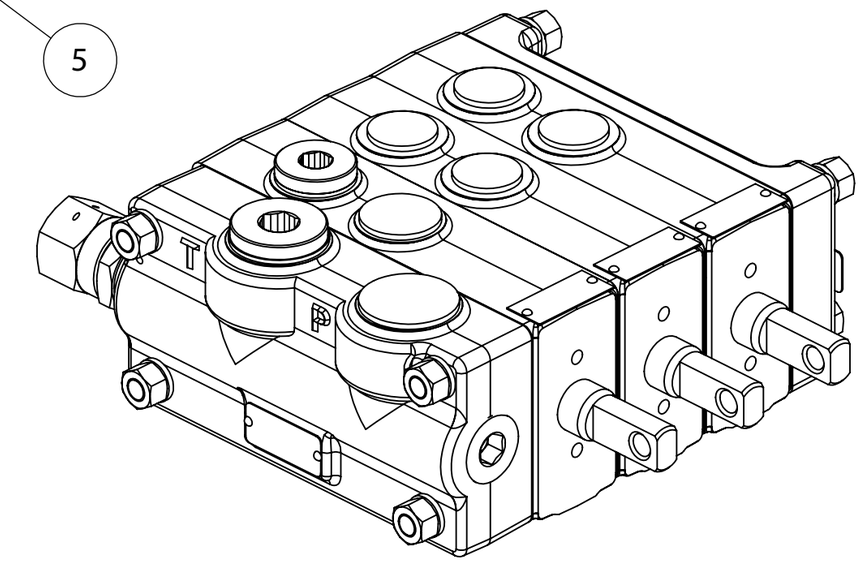

				14.10.2008	sheet 2/2	material		
					scale 1:2			
						description PX 346 4БнСС3		weight kg 11.713
							№ 12972.00.00	