12859.00.00

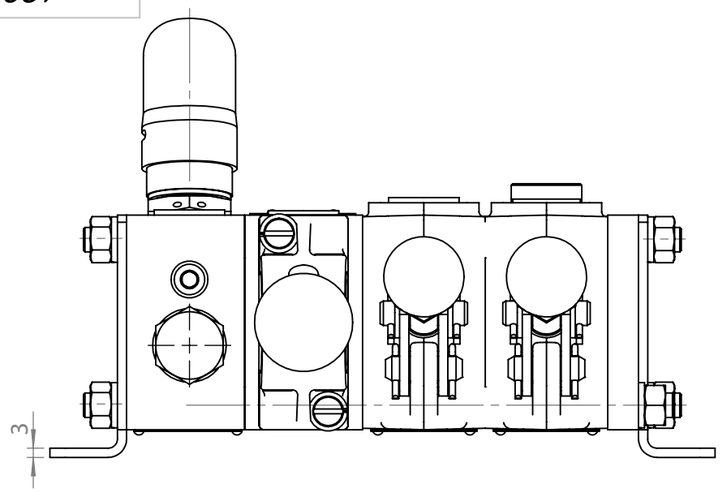

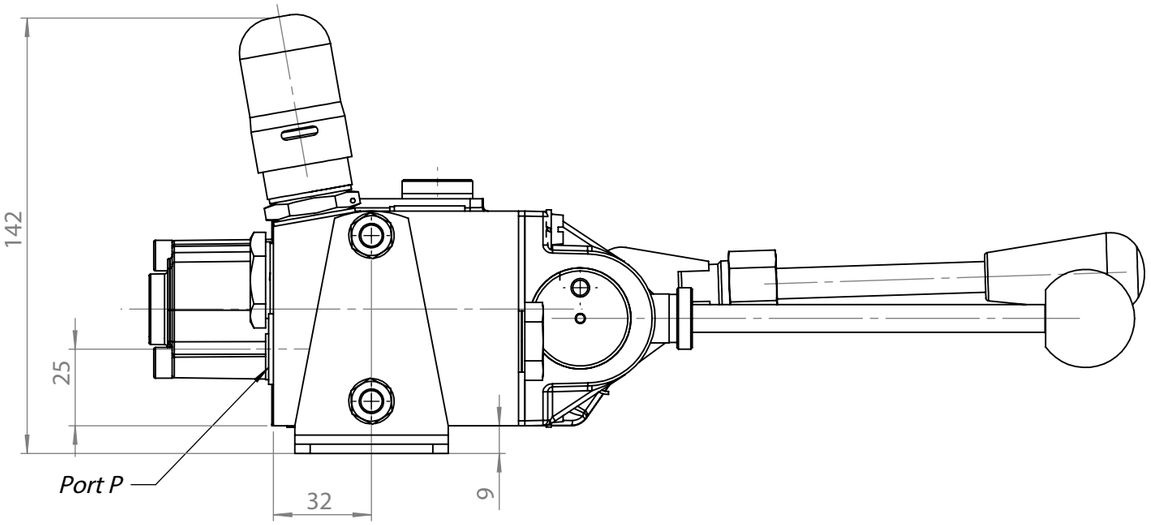

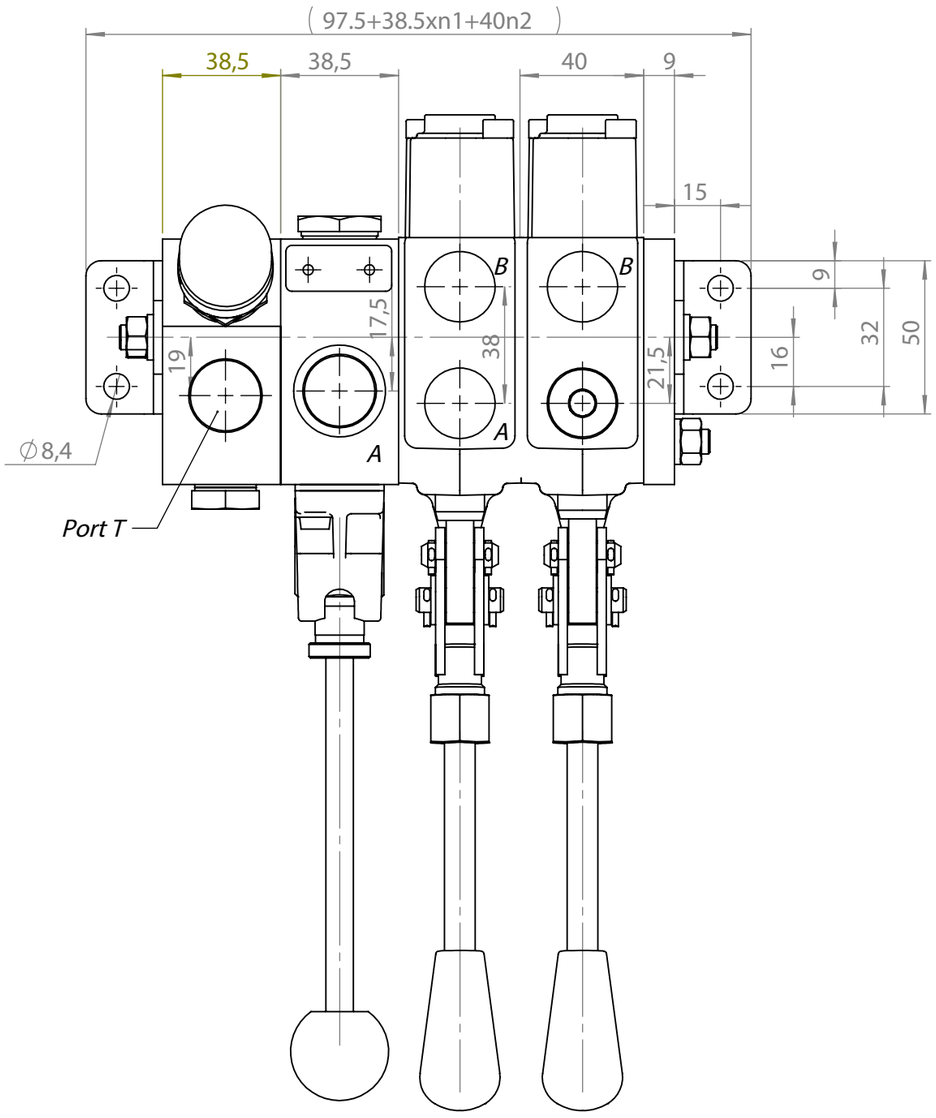

1.Technical parameters
1.1. Nominal flow- 30 dm³/min
1.2. Nominal pressure- 20 MPa
1.3. Pressure range from 7 to 20 MPa

2.1.Way of ordering
-Type
-Inlet section
-Section

2.2. In one valve all sections should be with one and the same hydraulic scheme of distribution- parallel or series
*2.3. All dimensions marked with * are for check up.*

			31.01.2008	sheet	1/2	material		
				scale	1:5			
						description		маса/weight kg
							Sectional valve PX 348	8.005
						№	12859.00.00	

12859.00.00

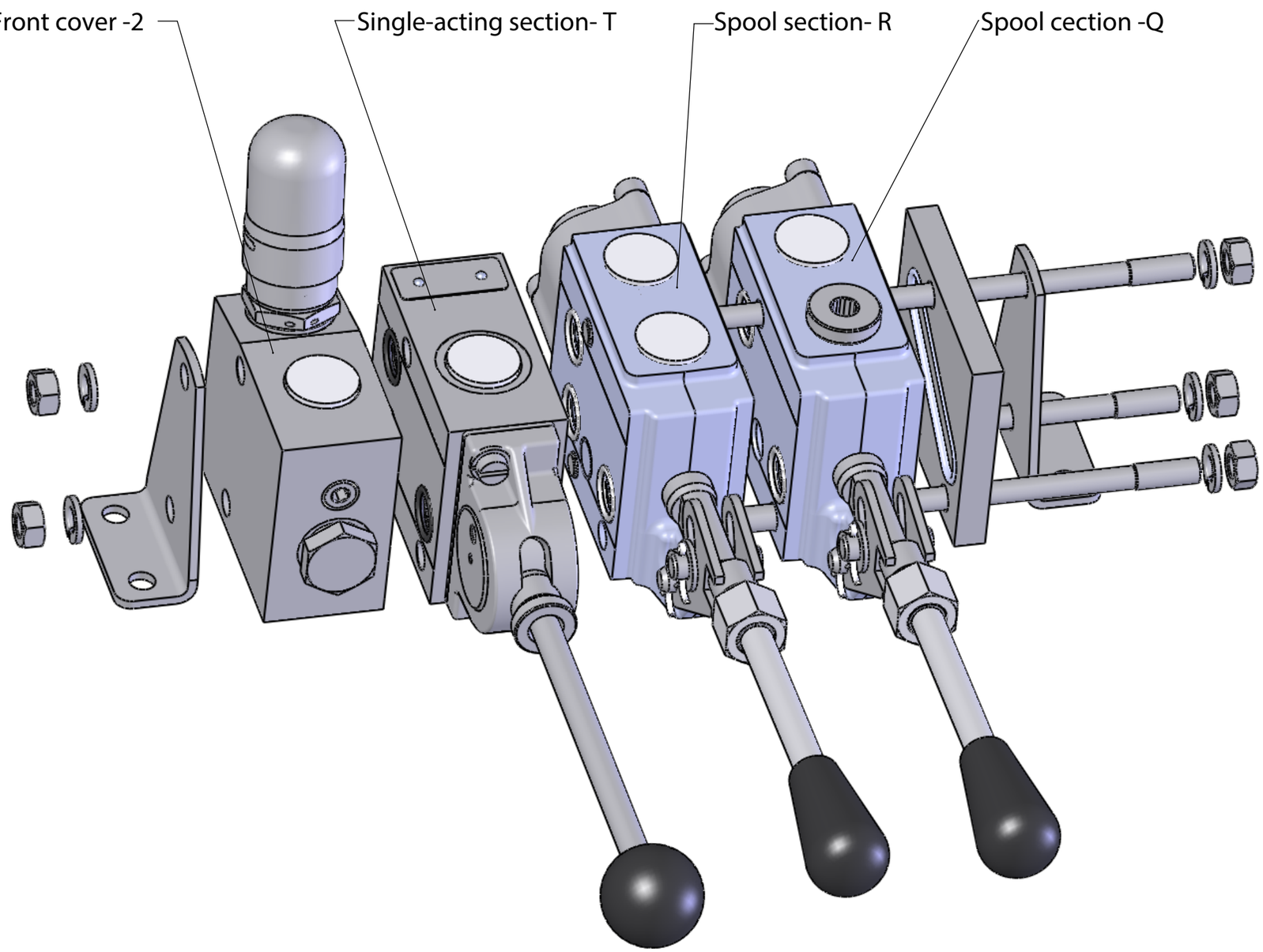

PX 348 - 2TRQ

				31.01.2008	sheet 2/2	material		
					scale 1:5			
						description		маса/weight kg
						Sectional valve PX 348		8.005
							№ 12859.00.00	